ALTV615DC4UL
CCTV Camera and Accessory Power Supply

Overview:

Altronix ALTV615DC4UL CCTV Power Supply is designed with four (4) individually fused outputs for powering CCTV cameras and other video accessories. It provides 5.5-15VDC distributed via four (4) fused outputs with a total of up to 2.5A continuous supply current.

Specifications:

Agency Listing:

- UL Listed - U.S. and Canada for CCTV Equipment (UL 2044).

Input:

- Input 24VAC/40VA or 24VAC/50VA, UL Listed Plug-in transformer.

Output:

- Four (4) Class 2 Rated fuse protected power-limited outputs.
- 5.5VDC to 15VDC field adjustable.

Transformer	Output current 5.5VDC to 12VDC	Output current 12VDC to 15VDC
24VAC/40VA	2.25A	1.8A
24VAC/50VA	2.5A	2.5A

- Output fuses are rated @ 1.0A/250VAC.
- Filtered and electronically regulated outputs.

Electrical:

- Operating temperature: 0ºC to 49ºC ambient.
- System AC input VA requirement:
  24VAC/40VA: 192.05VA.
  24VAC/50VA: 241.5VA.

Features:

- AC input and DC output LED indicators.
- Power ON/OFF switch.
- Spare fuse(s) provided.
- Unit maintains camera synchronization.
- Ease of installation saves time and eliminates costly labor.

Enclosure Dimensions *(H x W x D approx.)*:

8.5” x 7.5” x 3.5” (215.9mm x 190.5mm x 88.9mm).

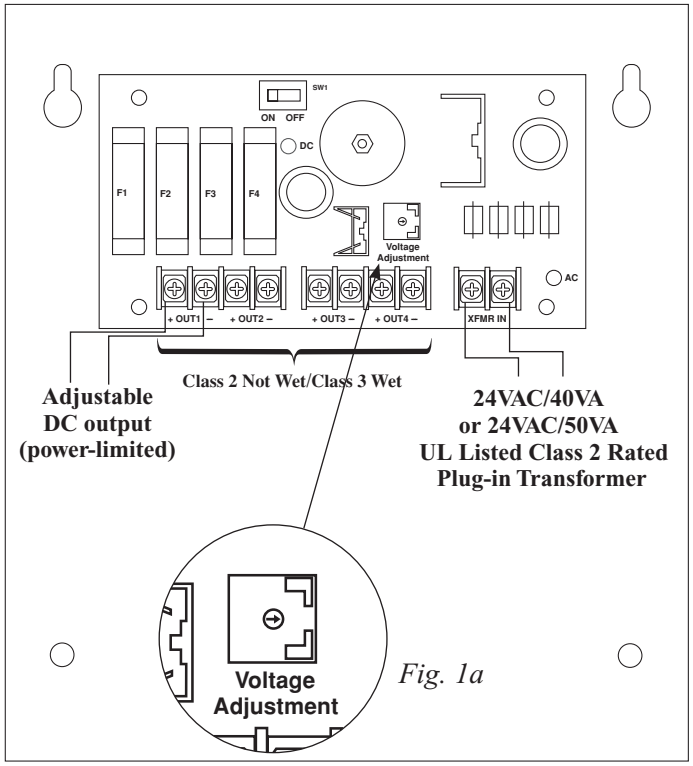

Fig. 1a

Fig. 1

Installation Instructions:

1. Mount ALTV615DC4UL in the desired location.
2. Connect 24VAC 40VA or 50VA UL Listed, Class 2 plug-in transformer to the terminals marked [XFMR IN] *(Fig. 1)*.
3. Adjust output voltage using trimpot on the board prior to connecting CCTV devices *(Fig. 1a)*.
4. Switch SW1 *(Fig. 1)* to the OFF position.
5. Measure output voltage before connecting devices. This helps avoiding potential damage.
   CAUTION: Determine the maximum operating voltage of the equipment being powered before adjusting the output voltage.
6. Connect DC CCTV cameras to the terminals marked [+ OUT1 –] to [+ OUT4 –] *(Fig. 1)* carefully observing correct polarity.
7. Switch SW1 *(Fig. 1)* to the ON position.
8. Green LED will illuminate when unit is powered
9. Upon completion of the wiring secure enclosure door with screws (supplied).

WARNING: To reduce the risk of fire or electric shock, do not expose the unit to rain or moisture. This installation should be made by qualified service personnel and should conform to the National Electrical Code and all local codes.

Terminal Identification:

Terminal Legend	Function/Description
XFMR IN	Low voltage AC input (24VAC 40VA or 50VA) from UL Listed, Class 2 plug-in transformer.
+ OUT1 – through + OUT4 –	Positive and Negative adjustable DC outputs. Up to (12VDC - 2.5A total continuous output), 12-15VDC 2A total continuous output *(See specifications)*.

Enclosure Dimensions *(H x W x D approximate)*:
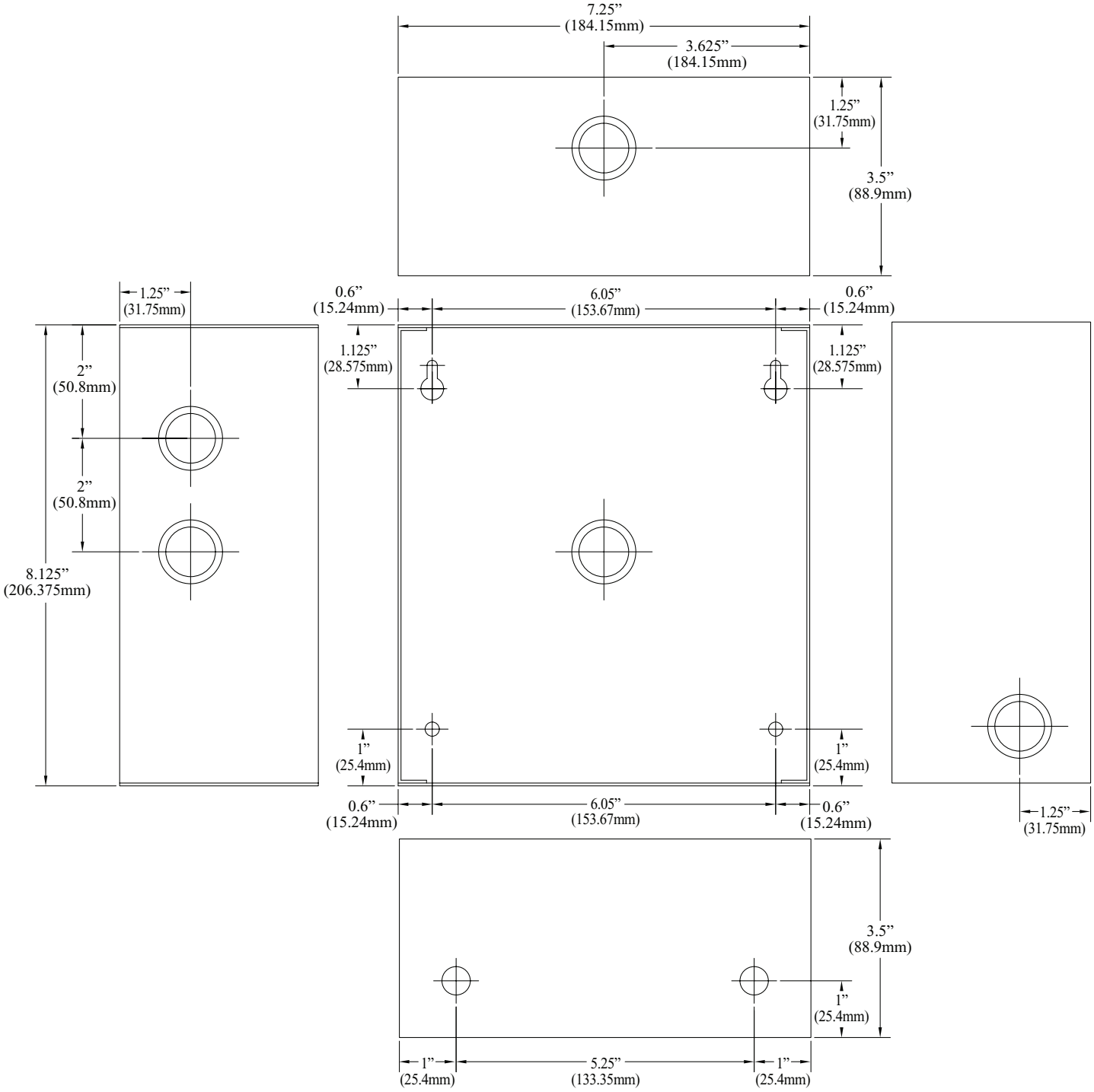
8.5” x 7.5” x 3.5” (215.9mm x 190.5mm x 88.9mm)